MARCEL

BUFFET 2 PORTES 3 TIROIRS

NOTICE DE MONTAGE

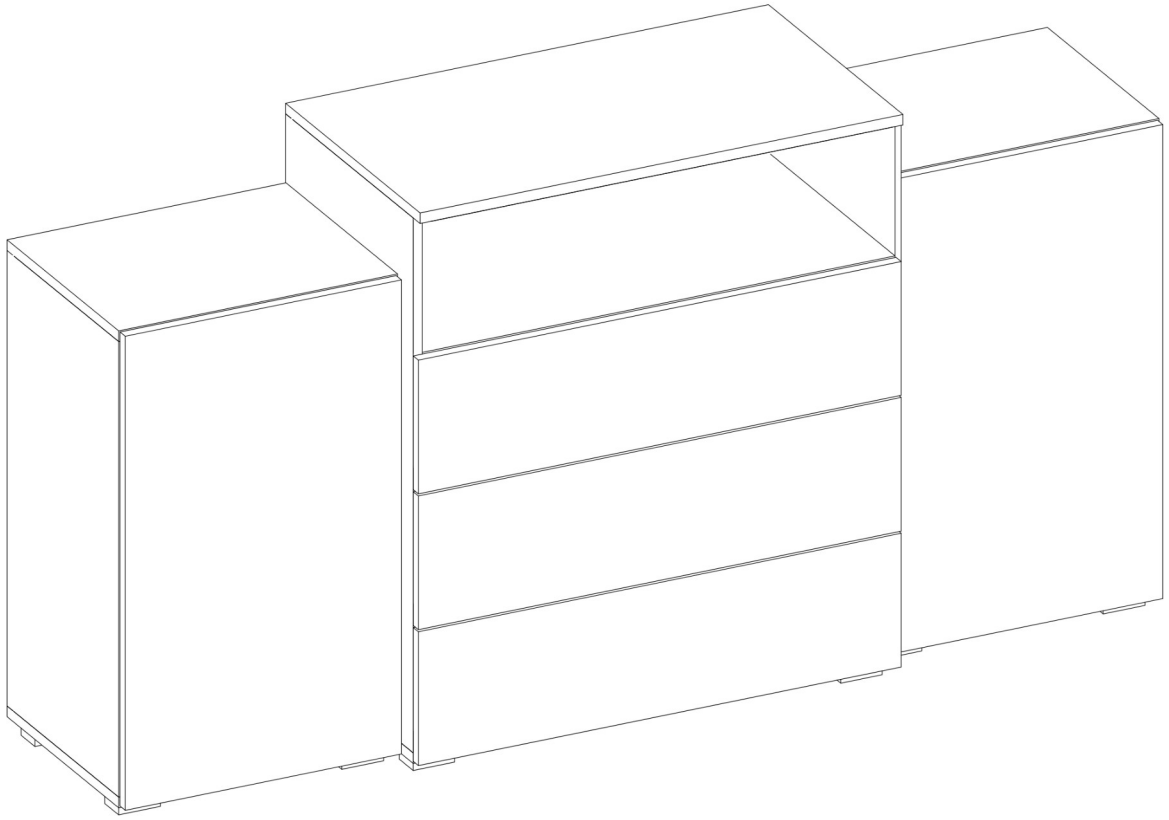

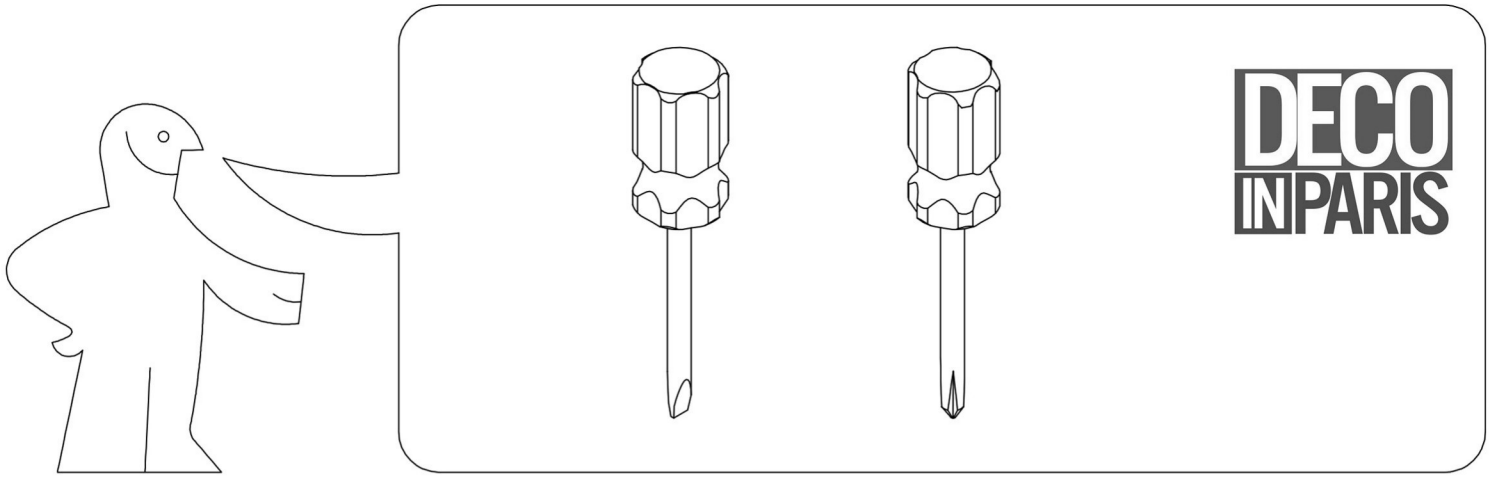
DECO
IN PARIS

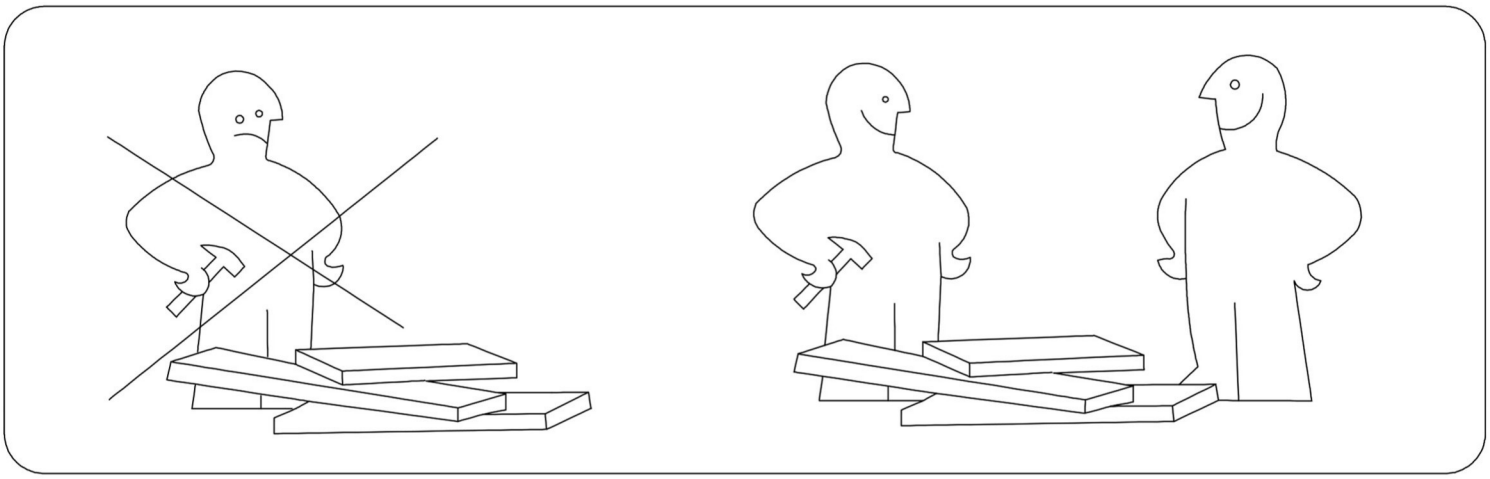

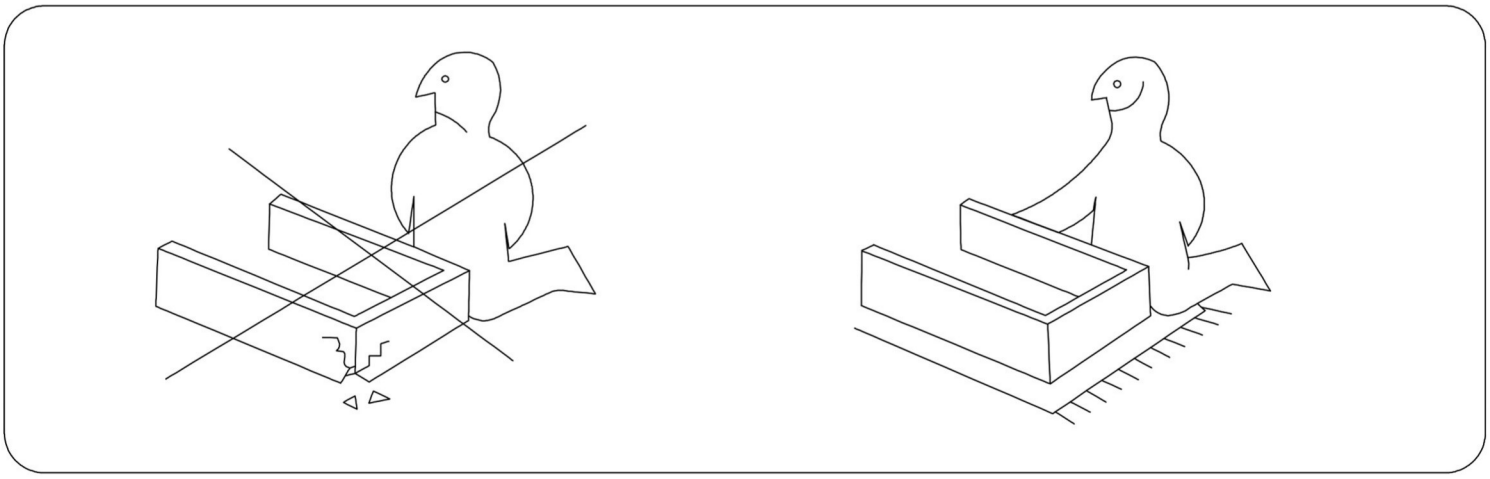

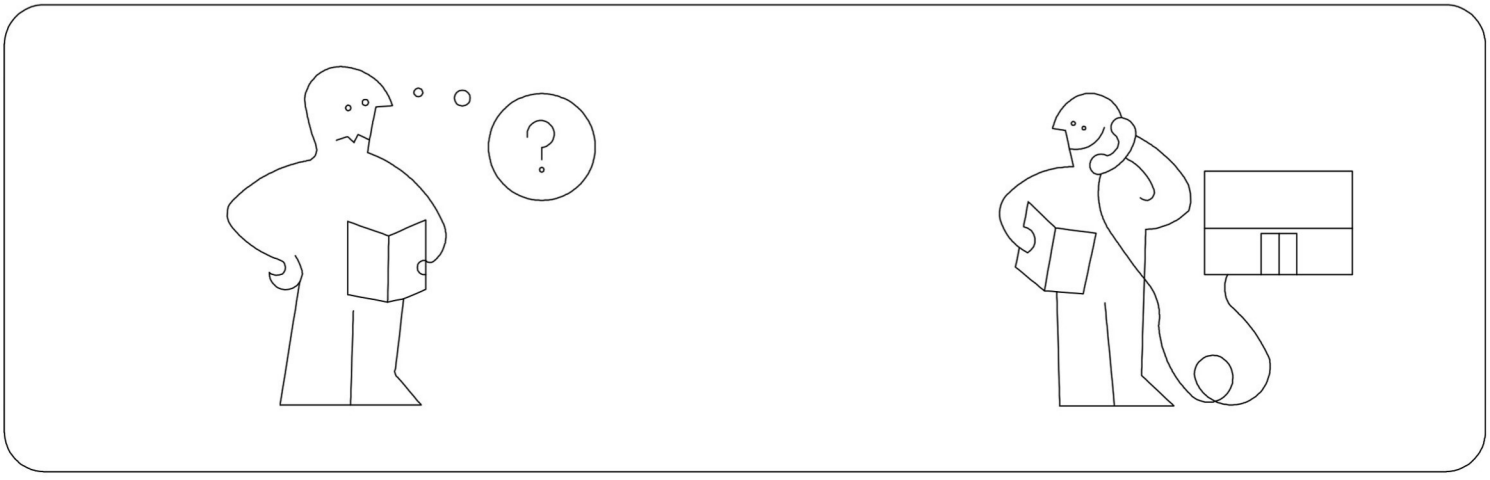
?

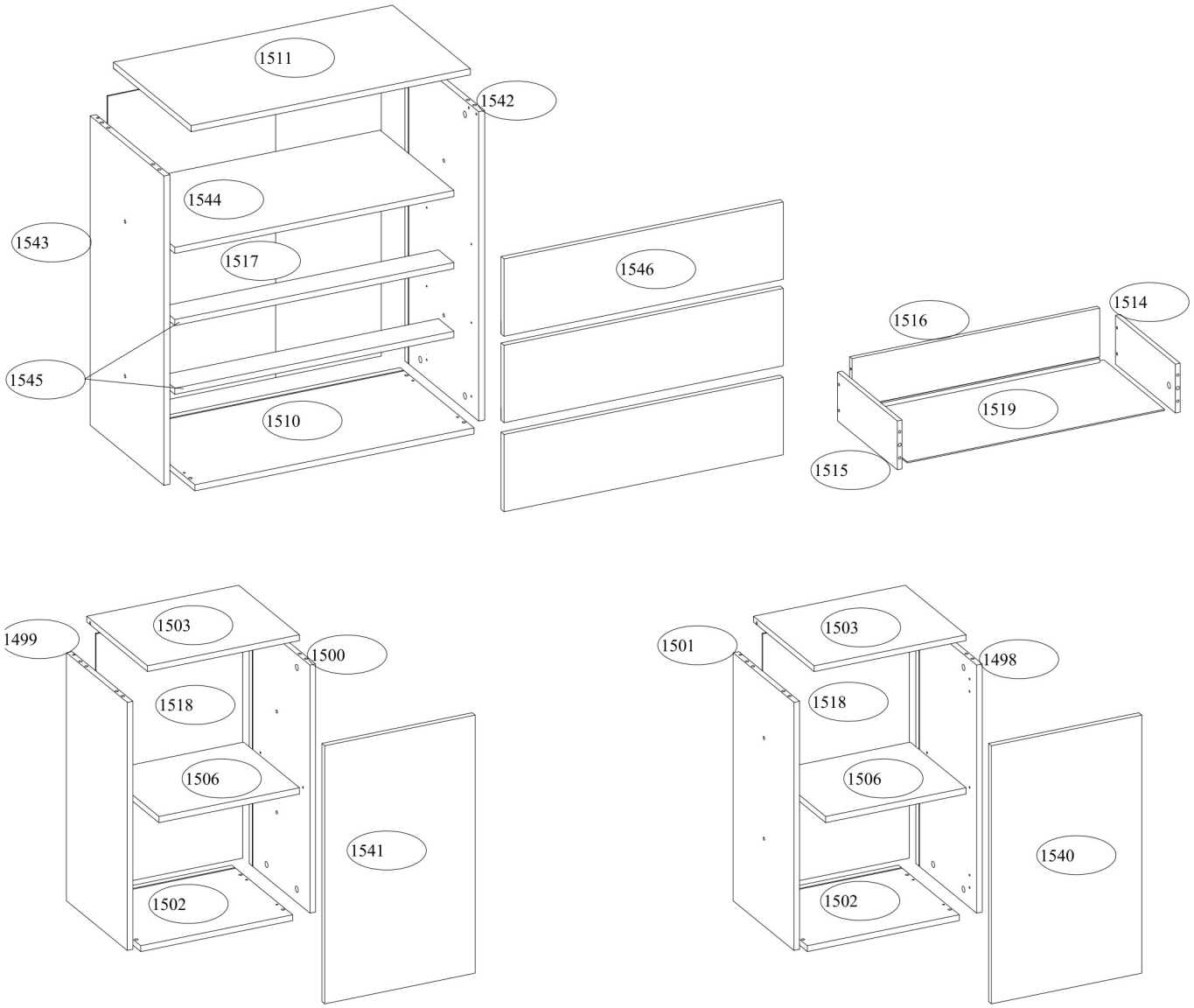
1511
1542
1544
1543
1517
1546
1545
1510
1516
1514
1519
1515
1499
1503
1500
1518
1506
1541
1502
1501
1503
1498
1518
1506
1540
1502

Colis 1/2

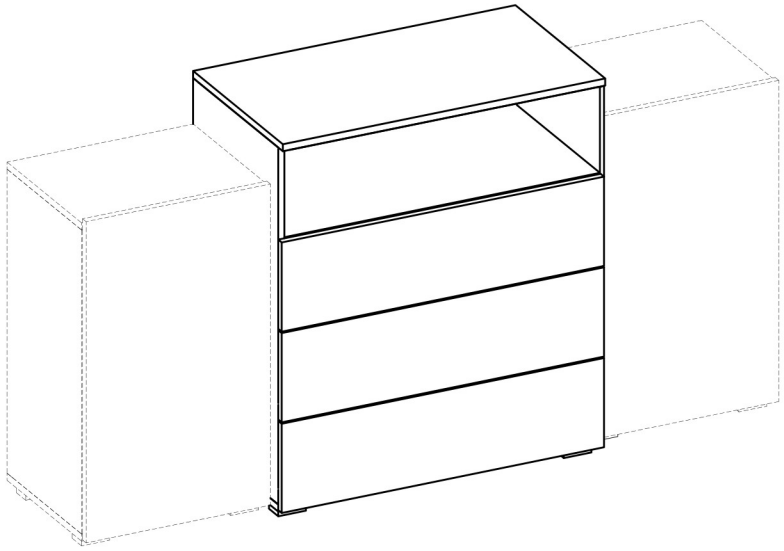

Colis 2/2

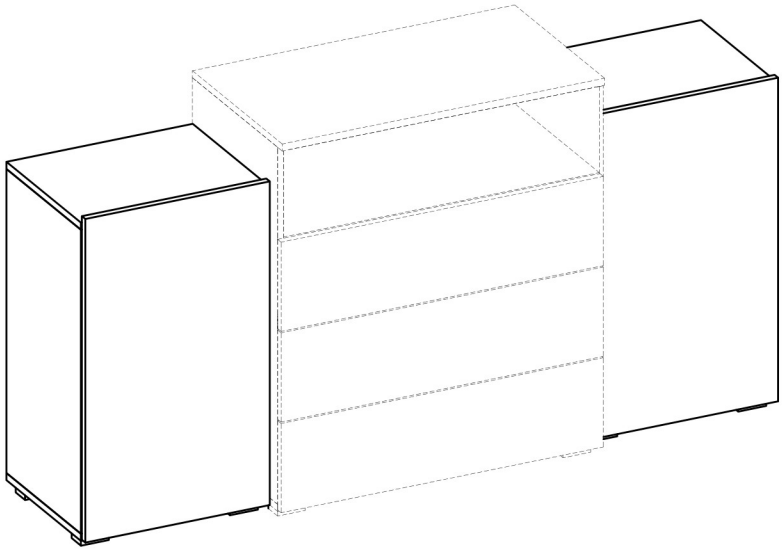

I

L- 350	6.3x13		8.0x30	
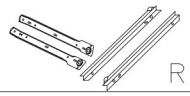 R	F2	A	D	B
3	12	8	8	8

II-III

	4.0x25	8.0x30			
M	G1	D	B	A	PS
4	8	8	8	8	2

IV-IX

8.0x30				Ø-20	L-350		3.0x13	3.0x20	5.0x70	
D	A	B	I	740 X3	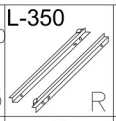 R	WS	H4	H1	O	Q
12	6	6	4	10	3	3	6	12	12	1

X-XI

		8.0x30	
S	L	D	B
4	2	8	8

XII-XIII

		8.0x30	
S	L	D	B
4	2	8	8

XIV-XV

	4.0x25	
M	G1	A
8	16	16

XVI-XXII

		6.3x13	K-01	
I	Z	F2	X	ZM
8	4	8	16	4

DECO INPARIS

I

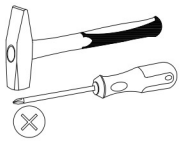

A	L- 350 R	6.3x13 F2	8.0x30 D	B
8	3	12	8	8

1x

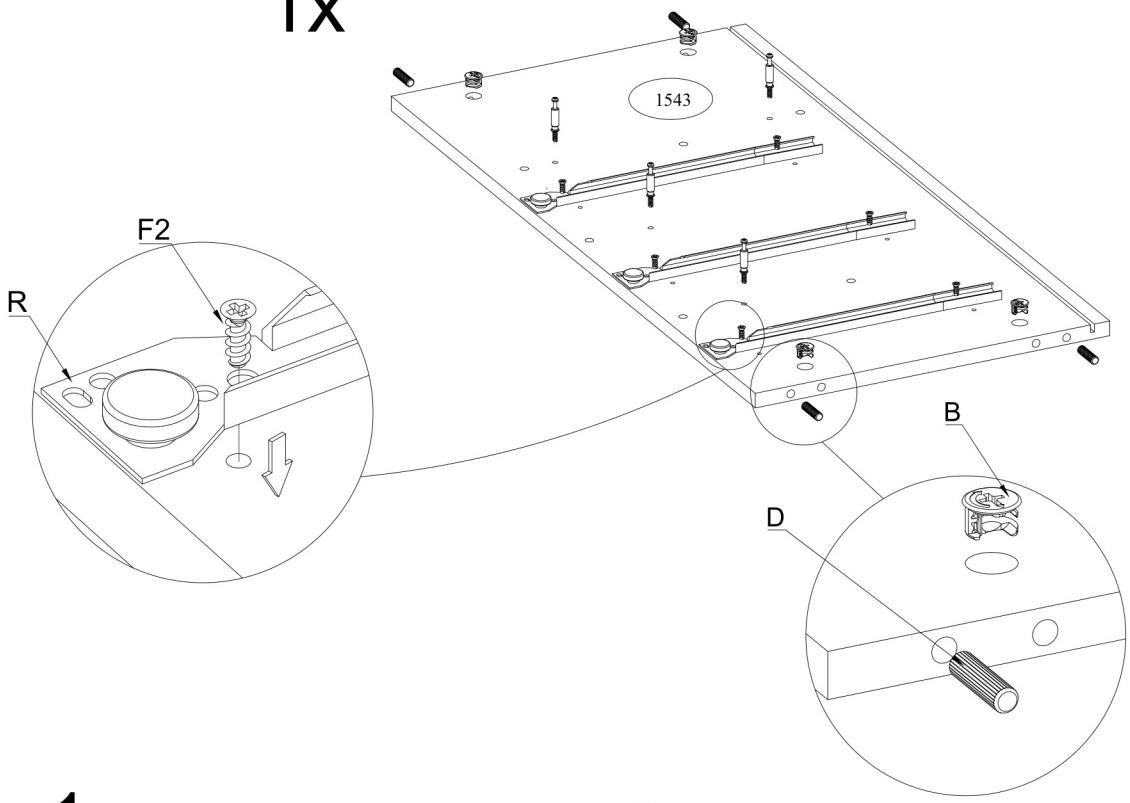

1x

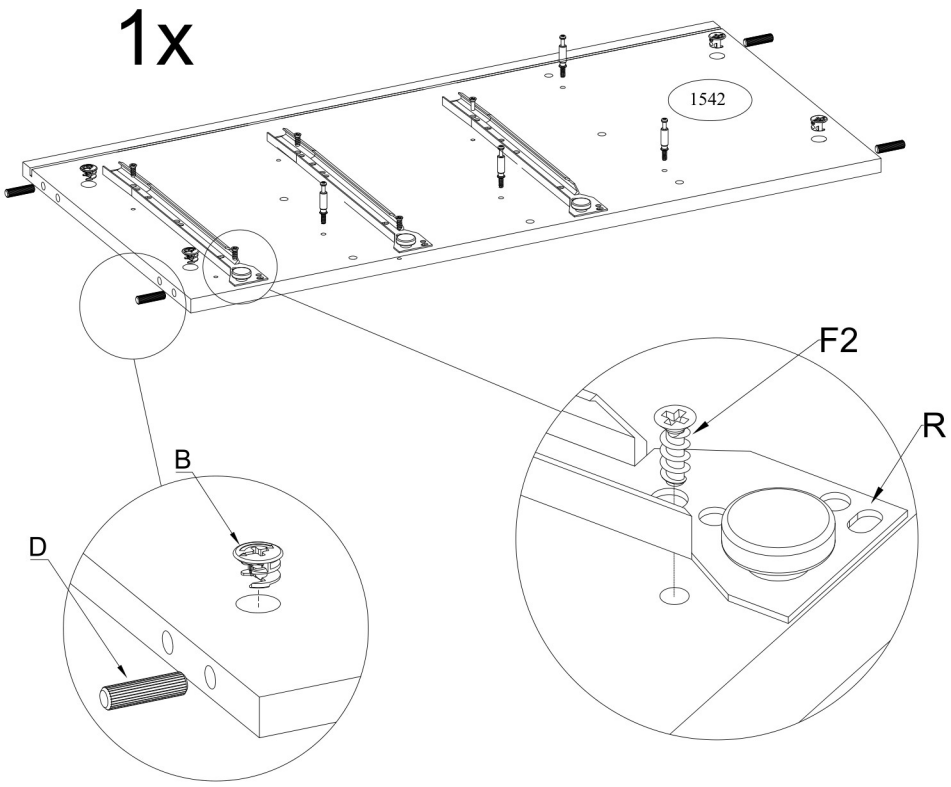

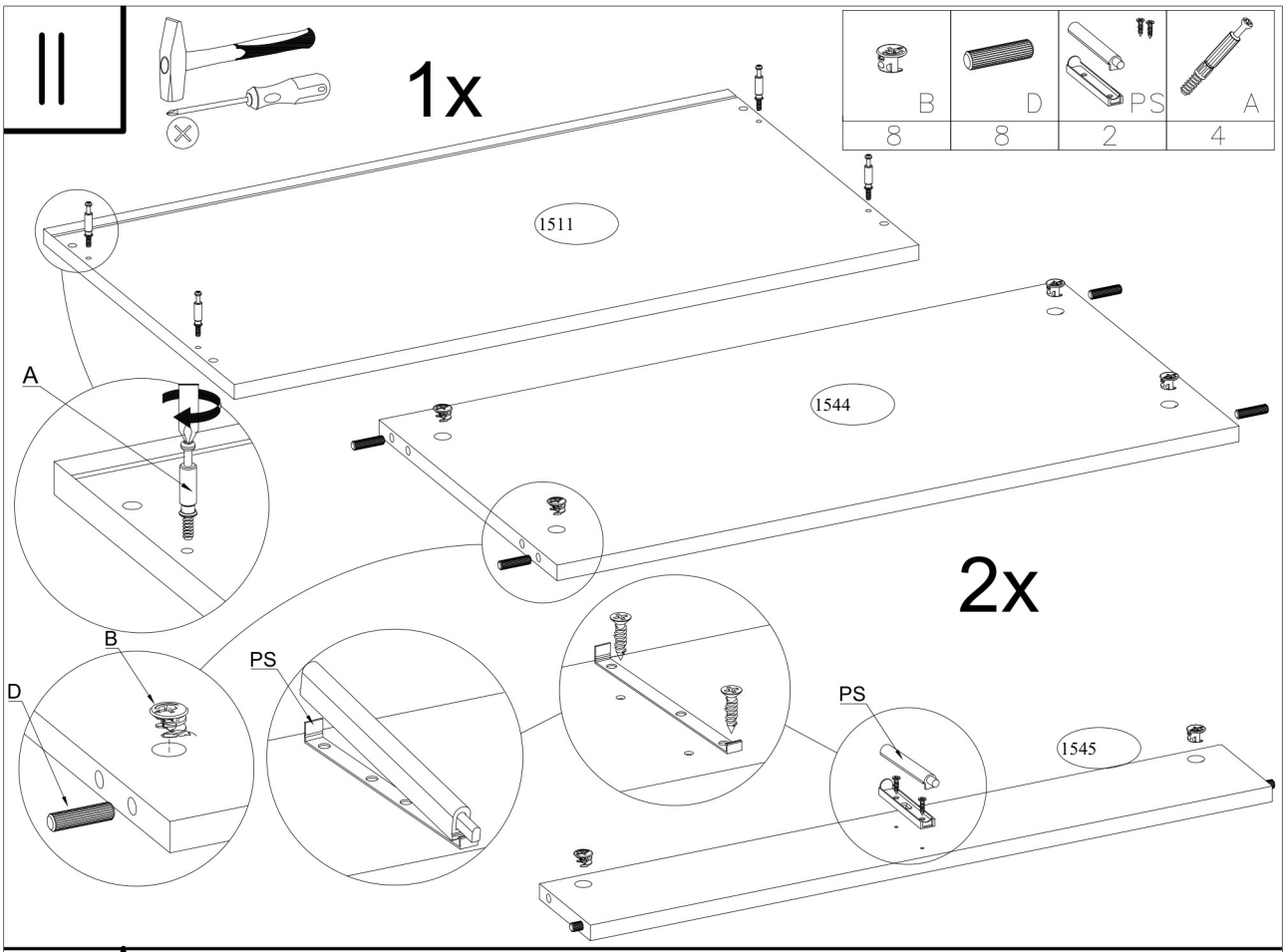
II
1x
B
D
PS
A
8
8
2
4
1511
1544
A
2x
B
D
PS
PS
1545

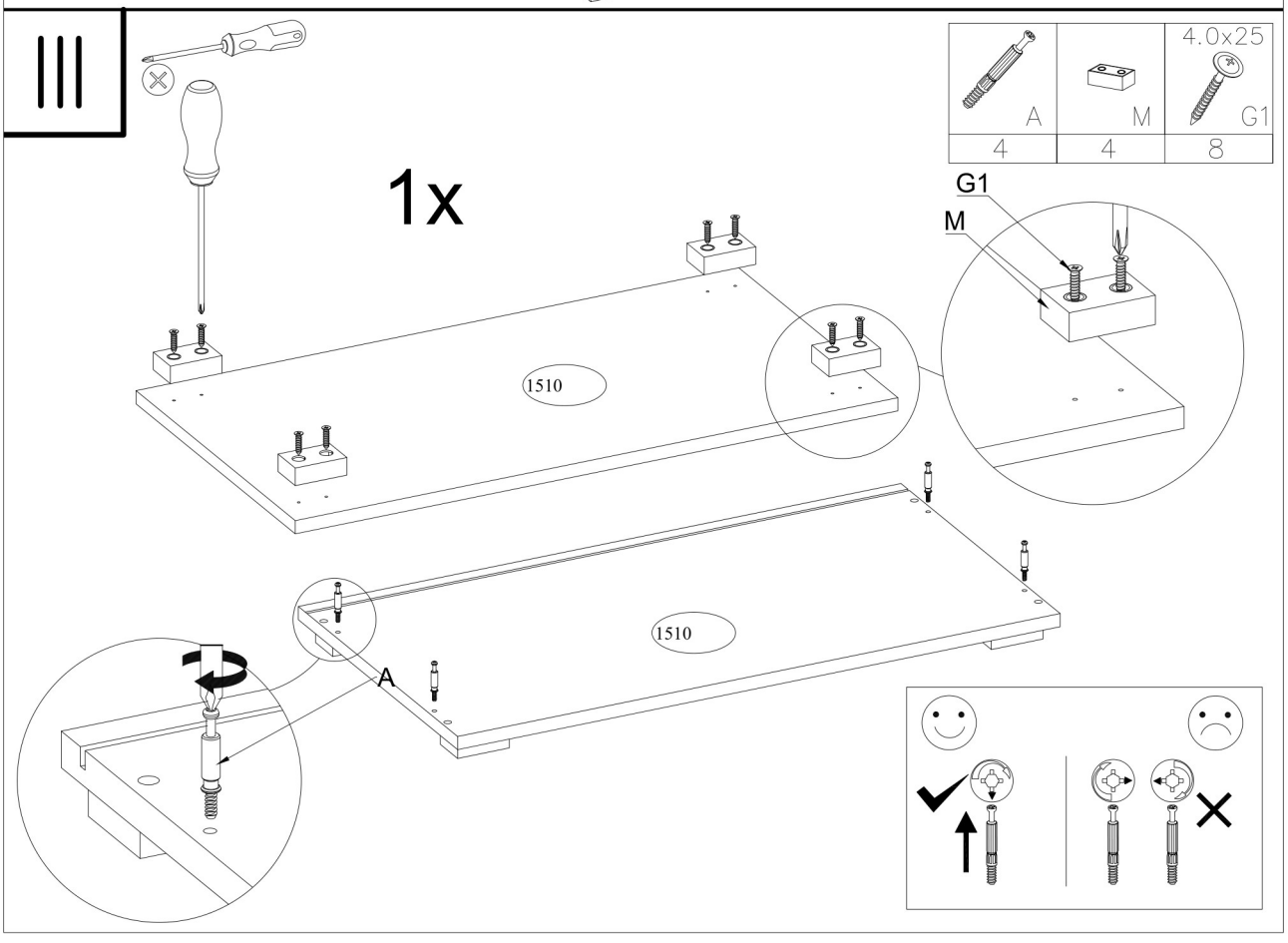
III
1x
A
M
4.0x25
G1
4
4
8
G1
M
1510
1510
A

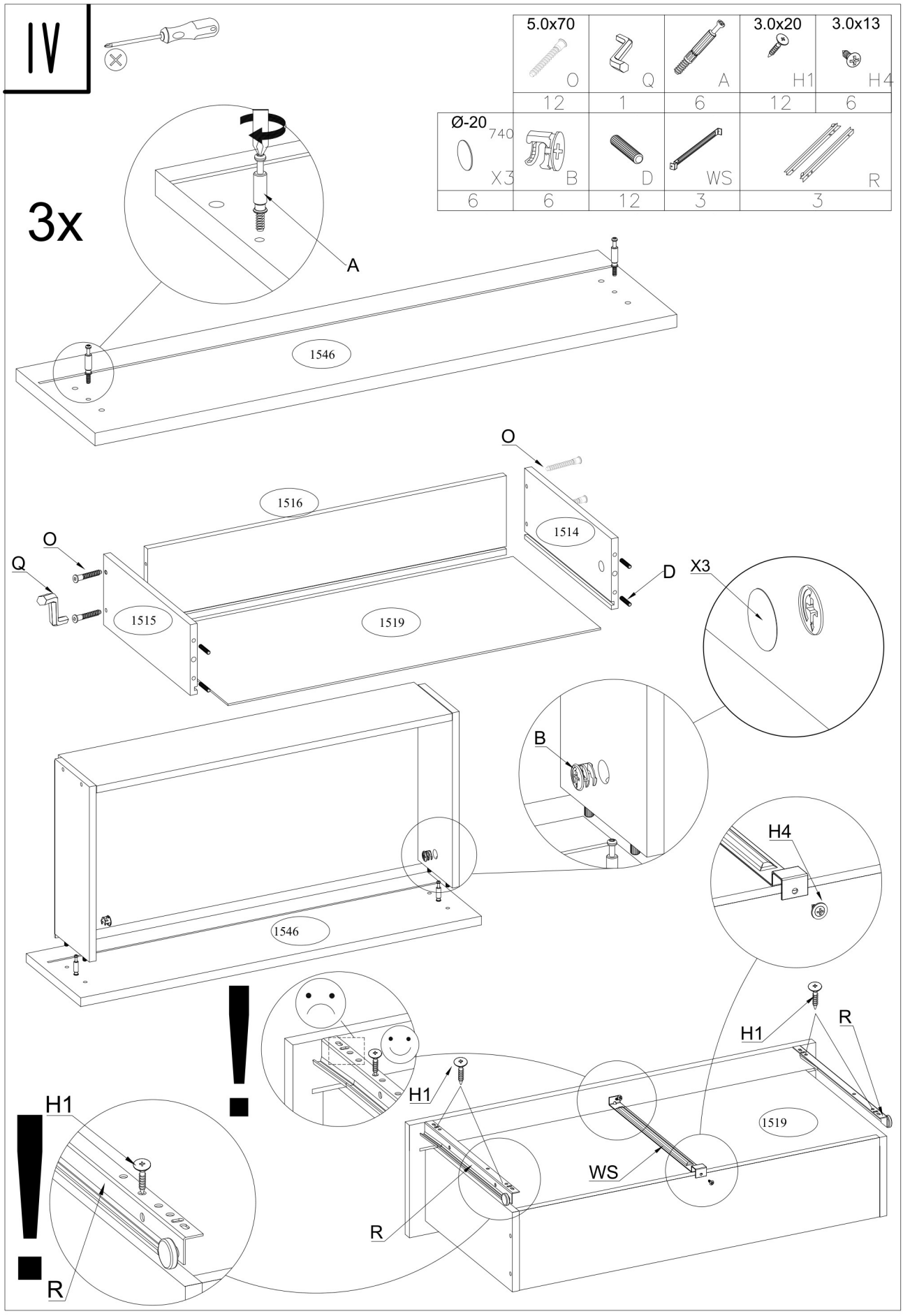
IV
3x
5.0x70
O
12
Q
1
A
6
3.0x20
H1
12
3.0x13
H4
6
Ø-20
740
X3
6
B
6
D
12
WS
3
R
3
A
1546
O
1516
1514
O
Q
D
X3
1515
1519
B
H4
1546
H1
R
H1
H1
1519
WS
R
R

V

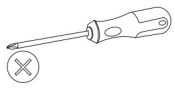

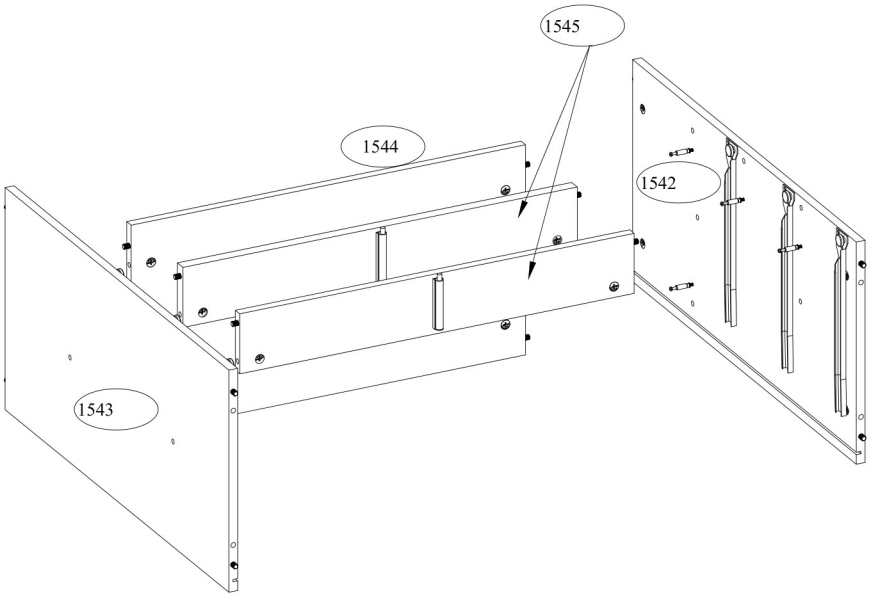

VI

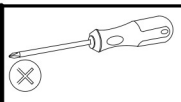

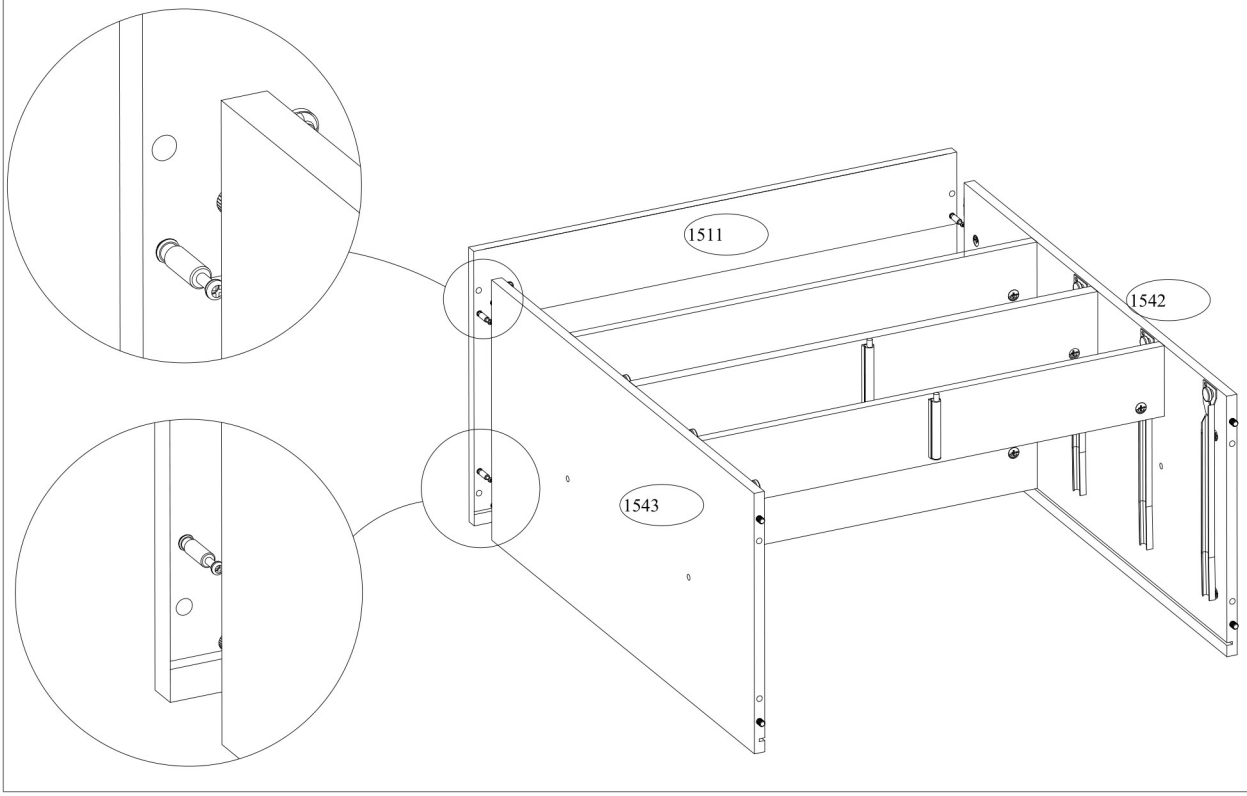

VII

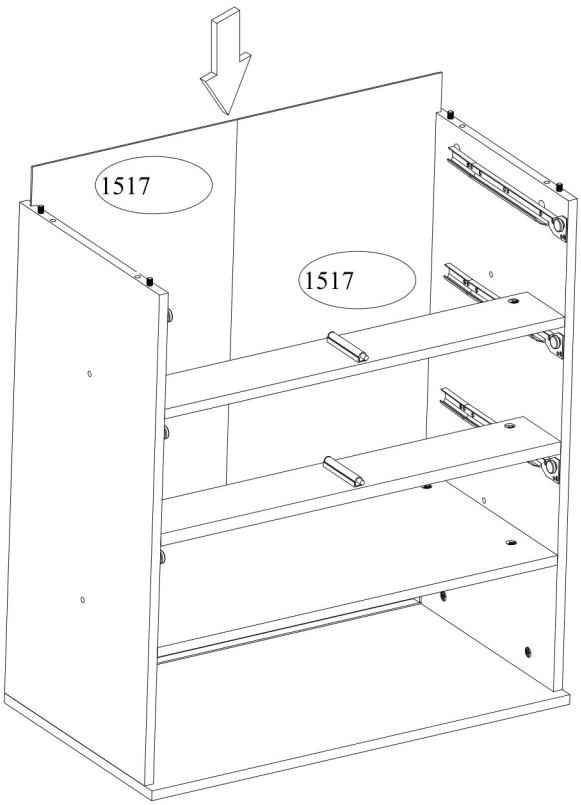

VIII

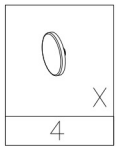

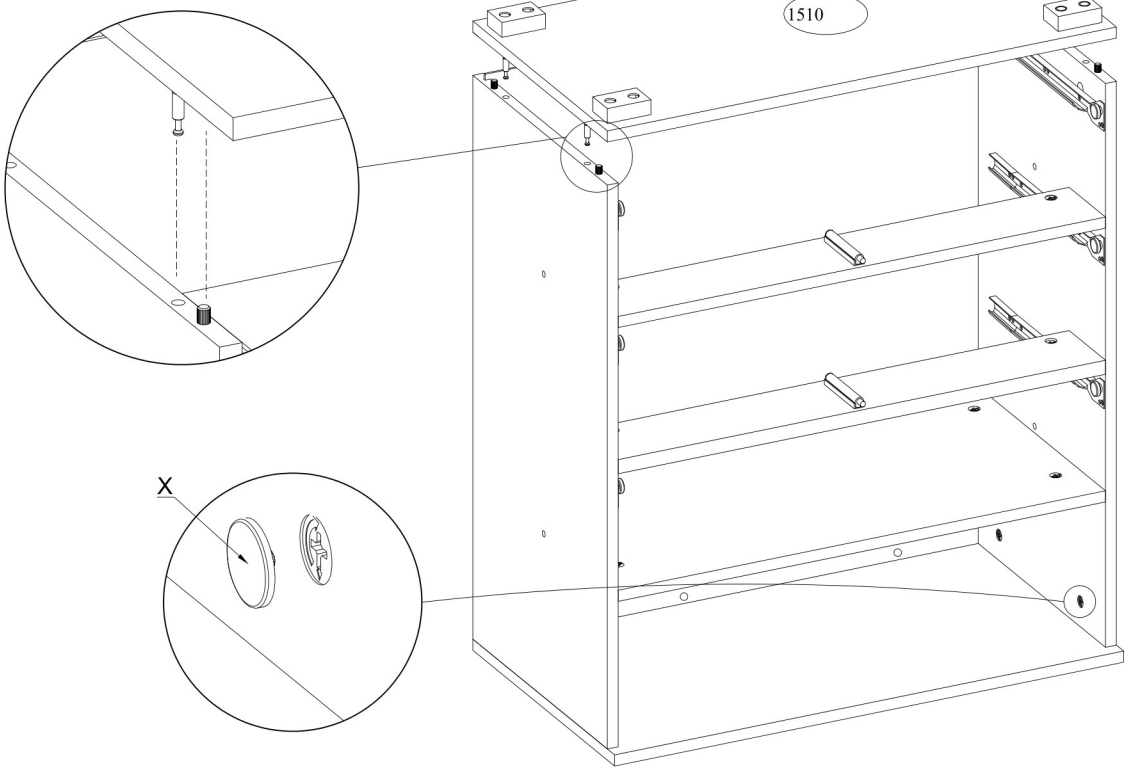

DECO IN PARIS

IX

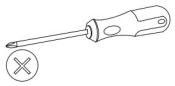

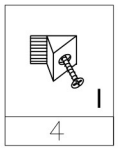

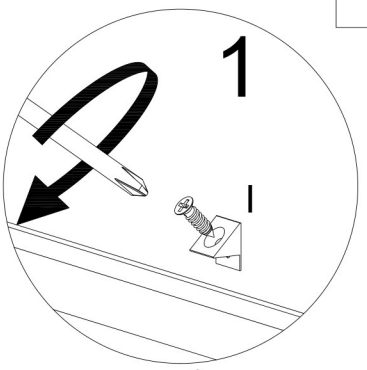

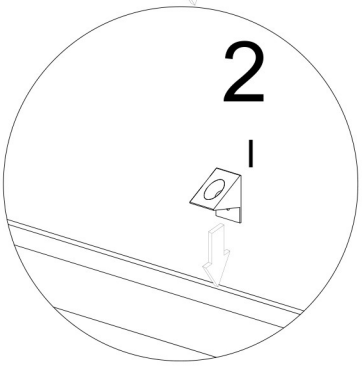

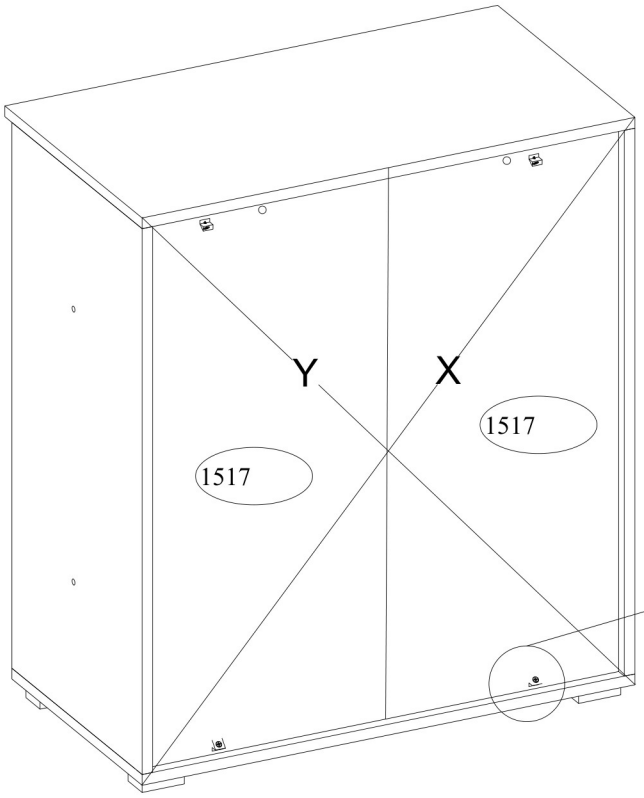

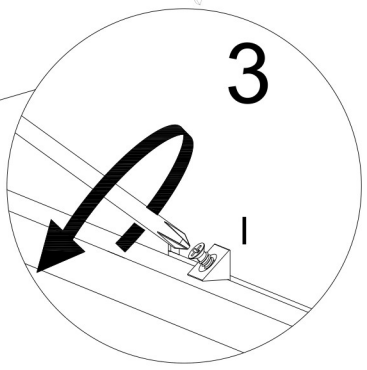

X=Y

X

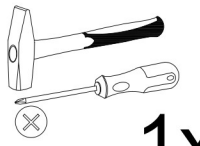

1x

L	S	8.0x30 D	B
2	2	4	4

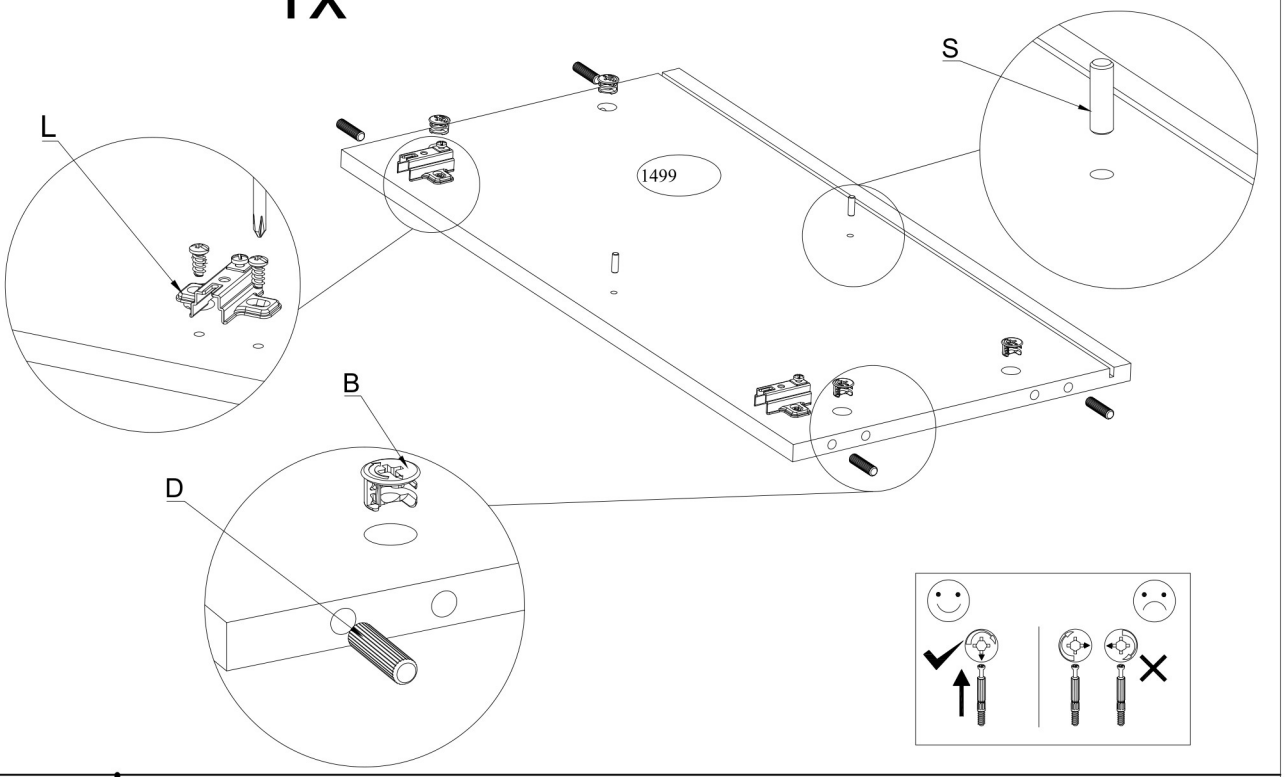

XI

1x

S	8.0x30 D	B
2	4	4

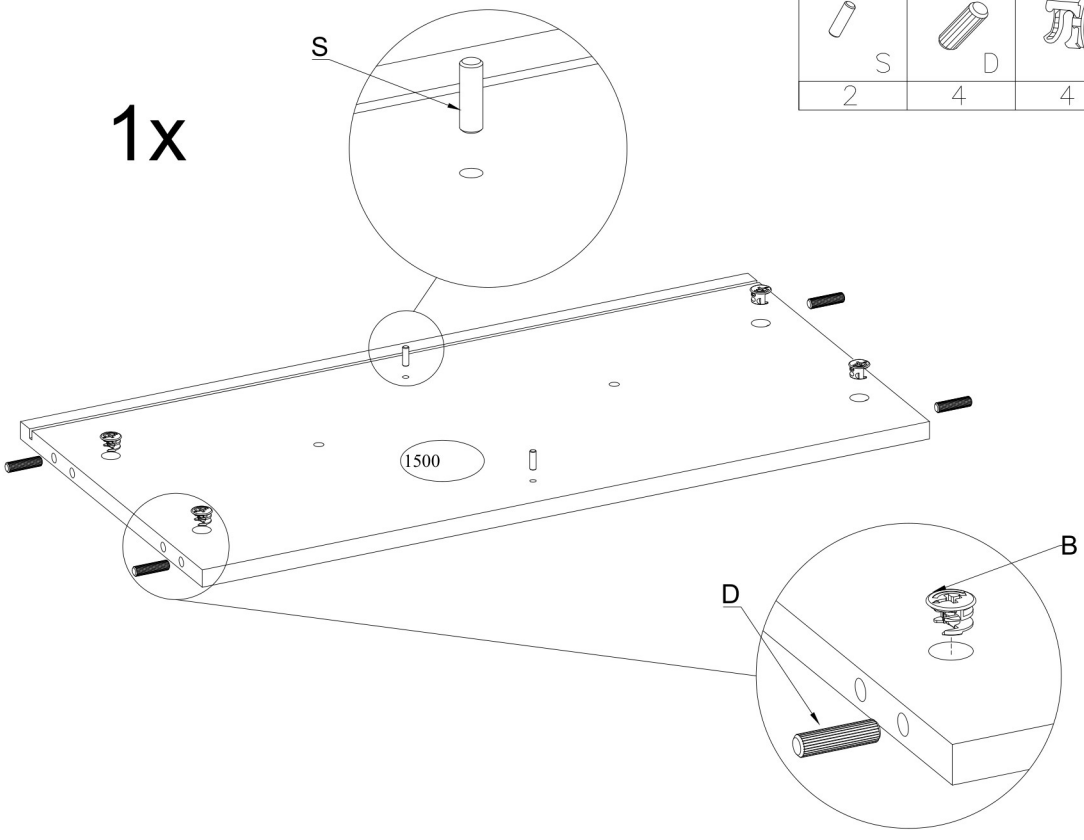

XII

1x

S	8.0x30 D	B
2	4	4

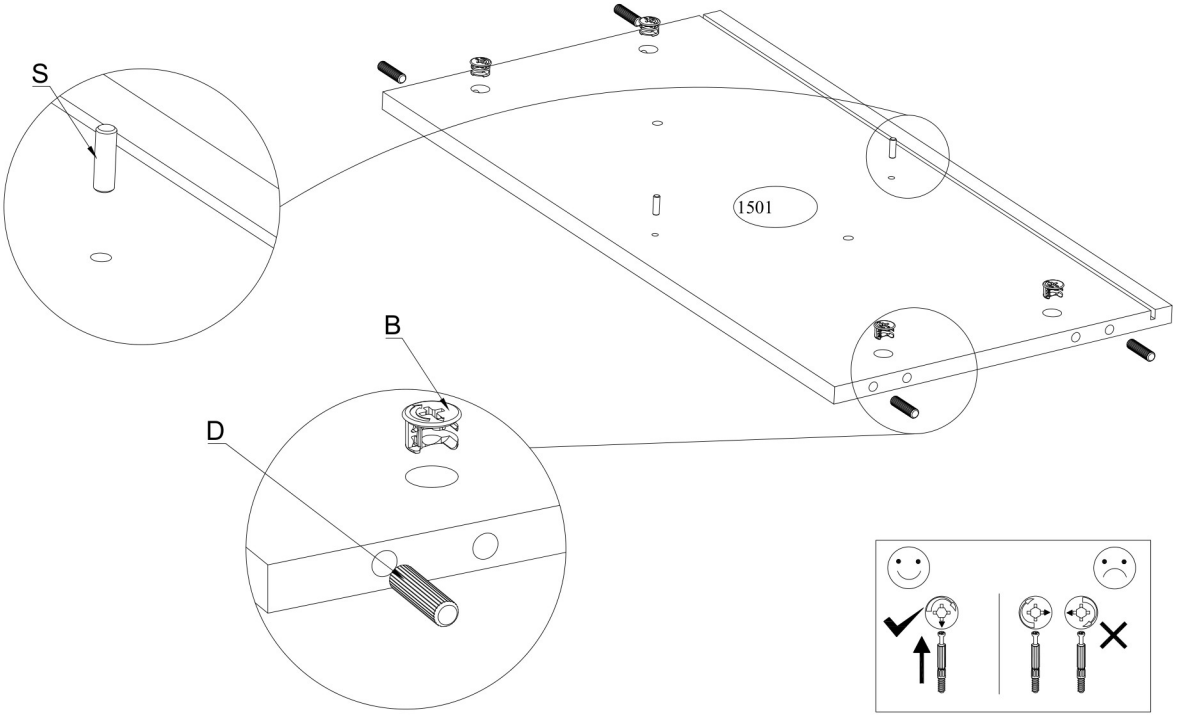

XIII

1x

S	L	8.0x30 D	B
2	2	4	4

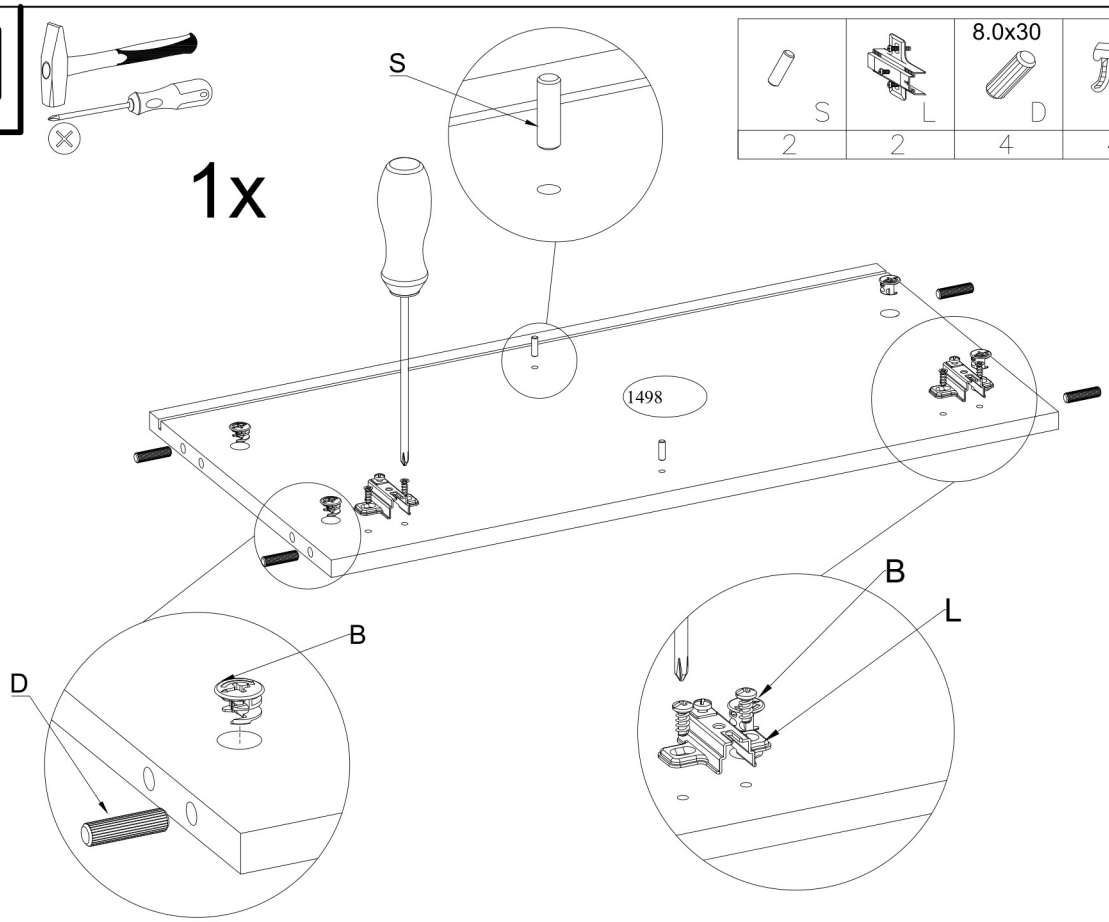

XIV

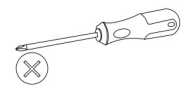

2x

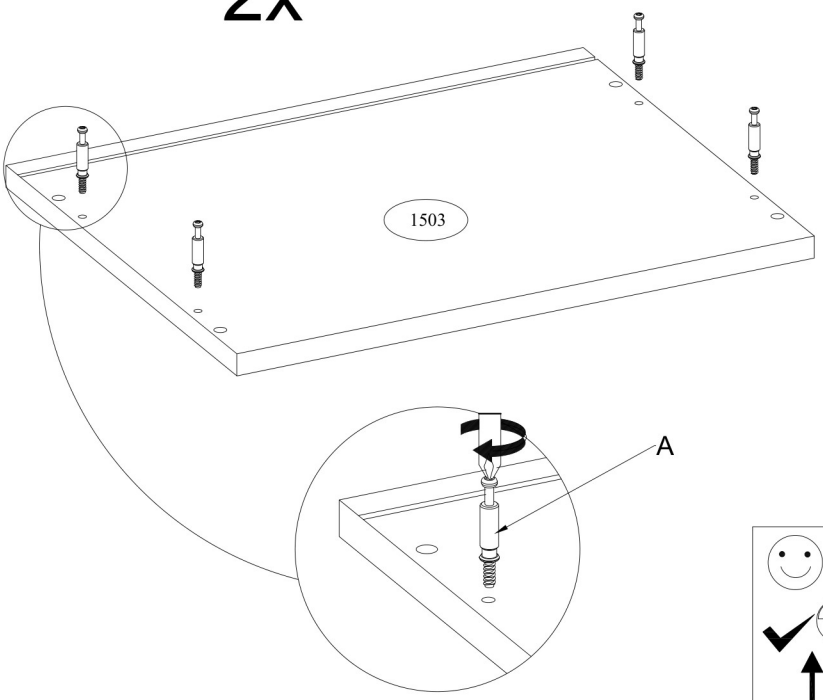

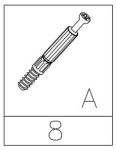

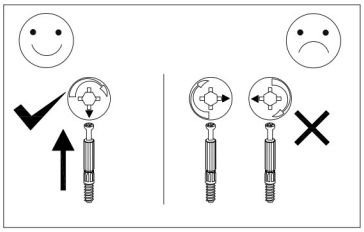

XV

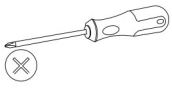

2x

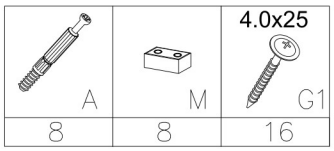

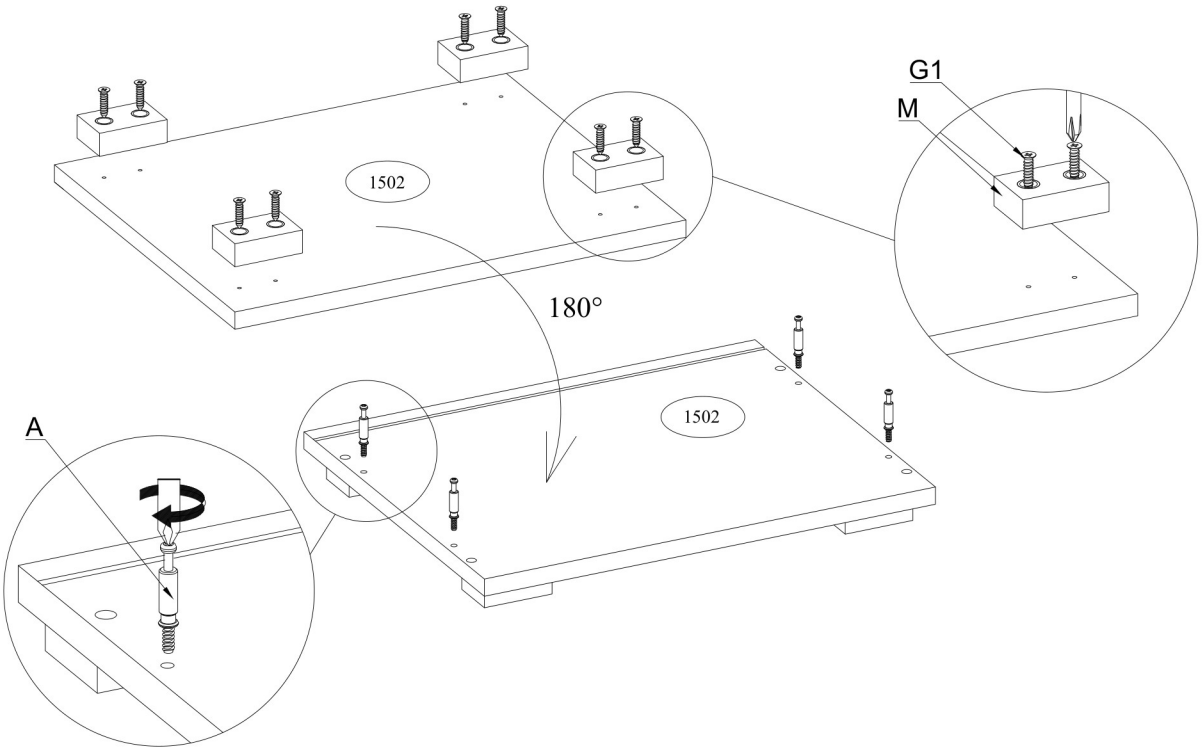

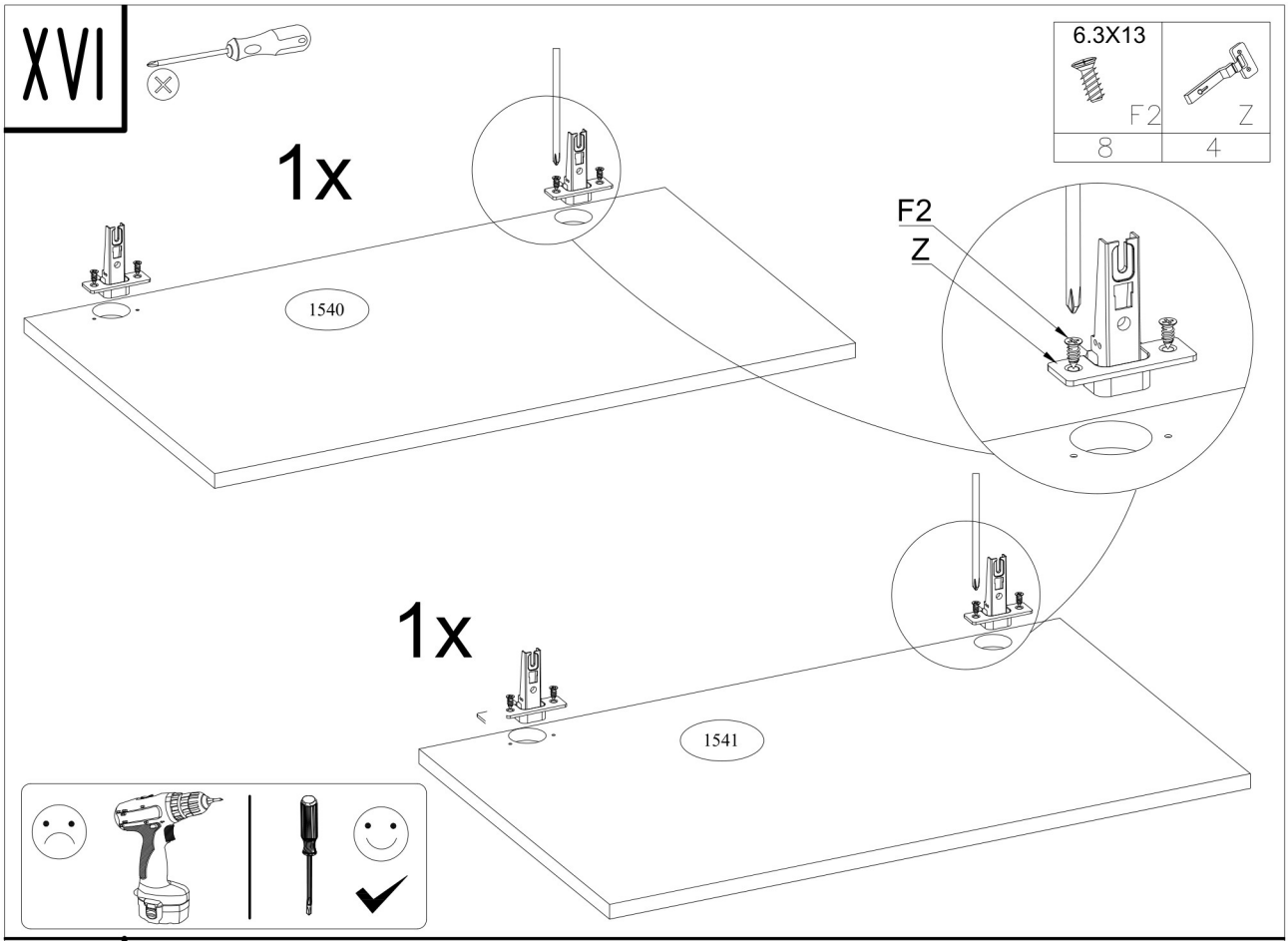
XVI
1x
1540
6.3X13
F2
Z
8
4
F2
Z
1x
1541

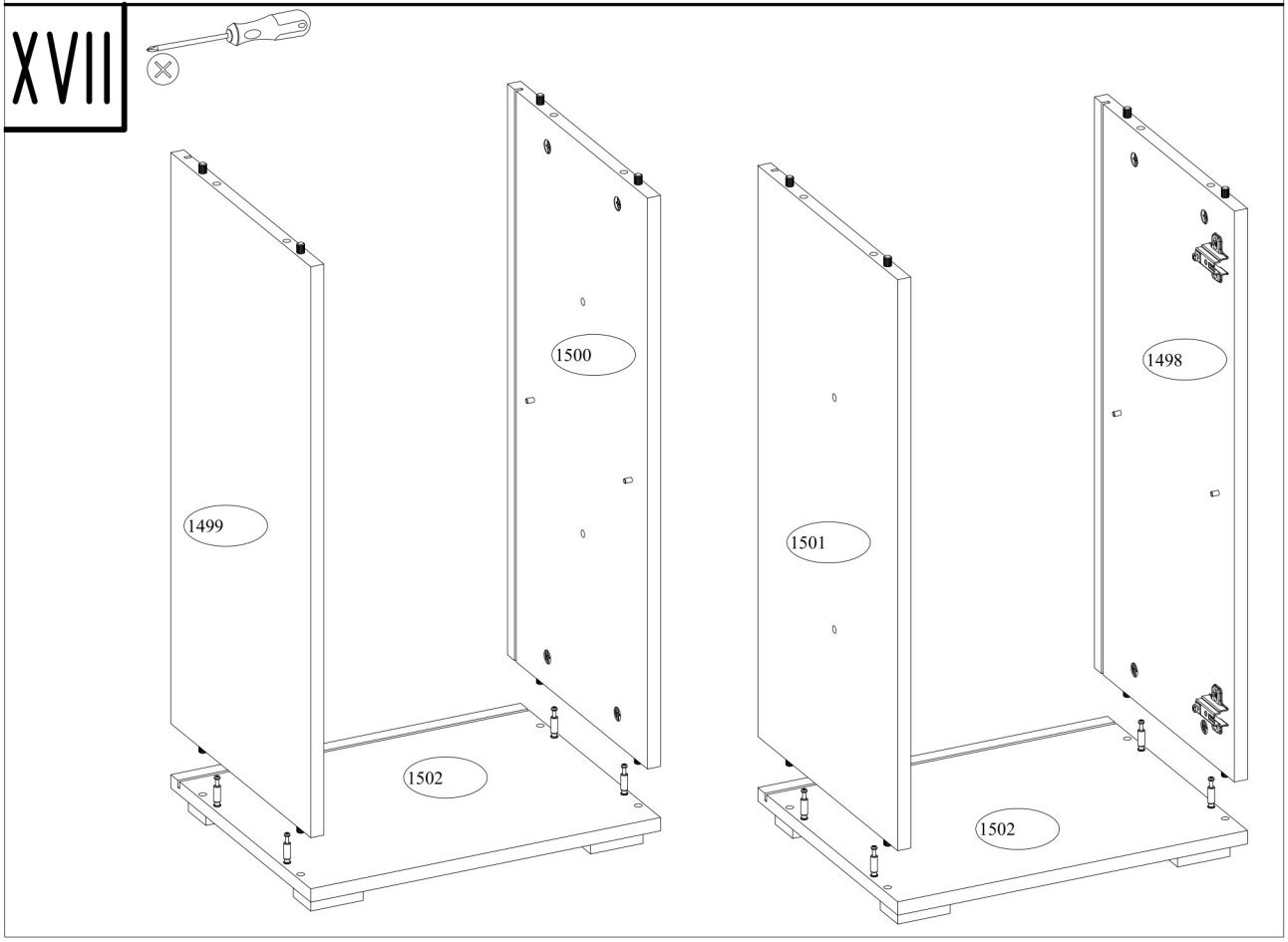
XVII
1499
1500
1502
1501
1498
1502

DECO IN PARIS

XVIII

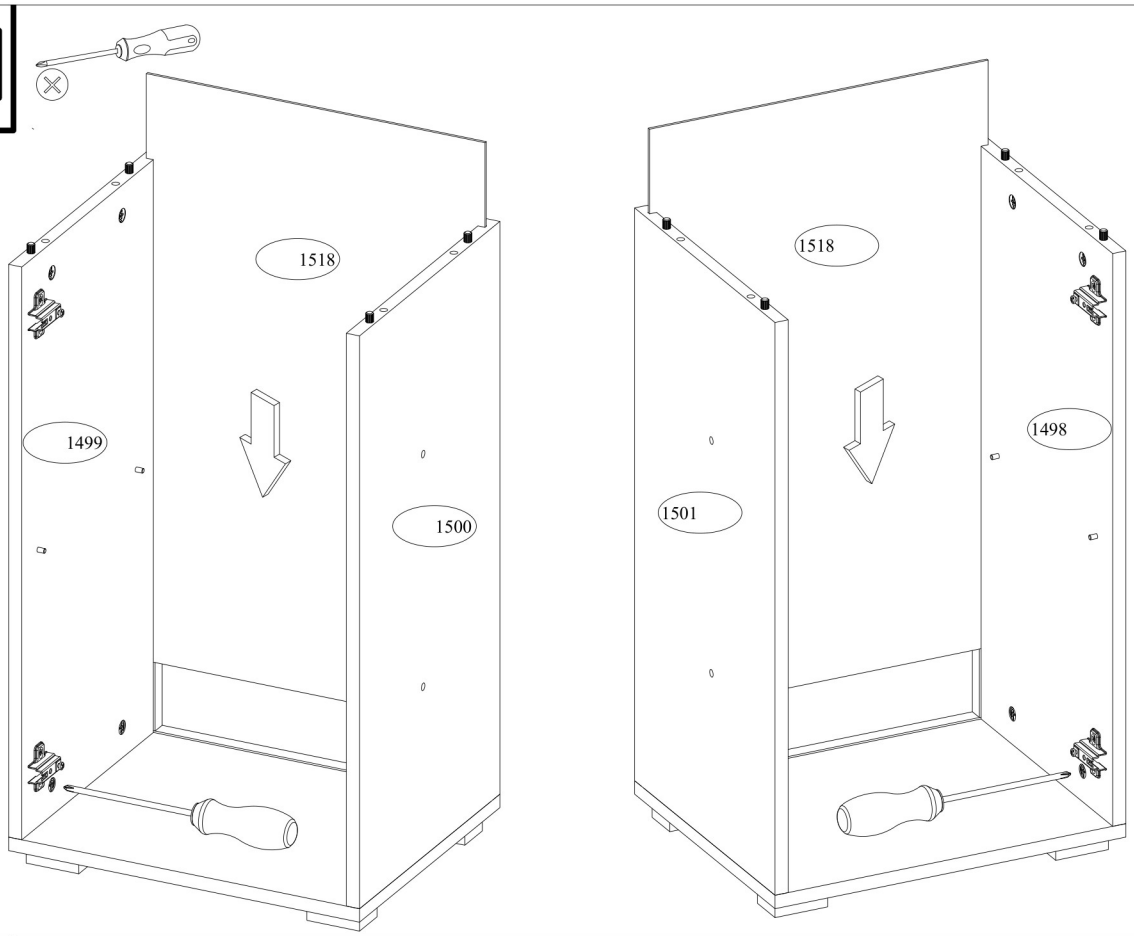

XIX

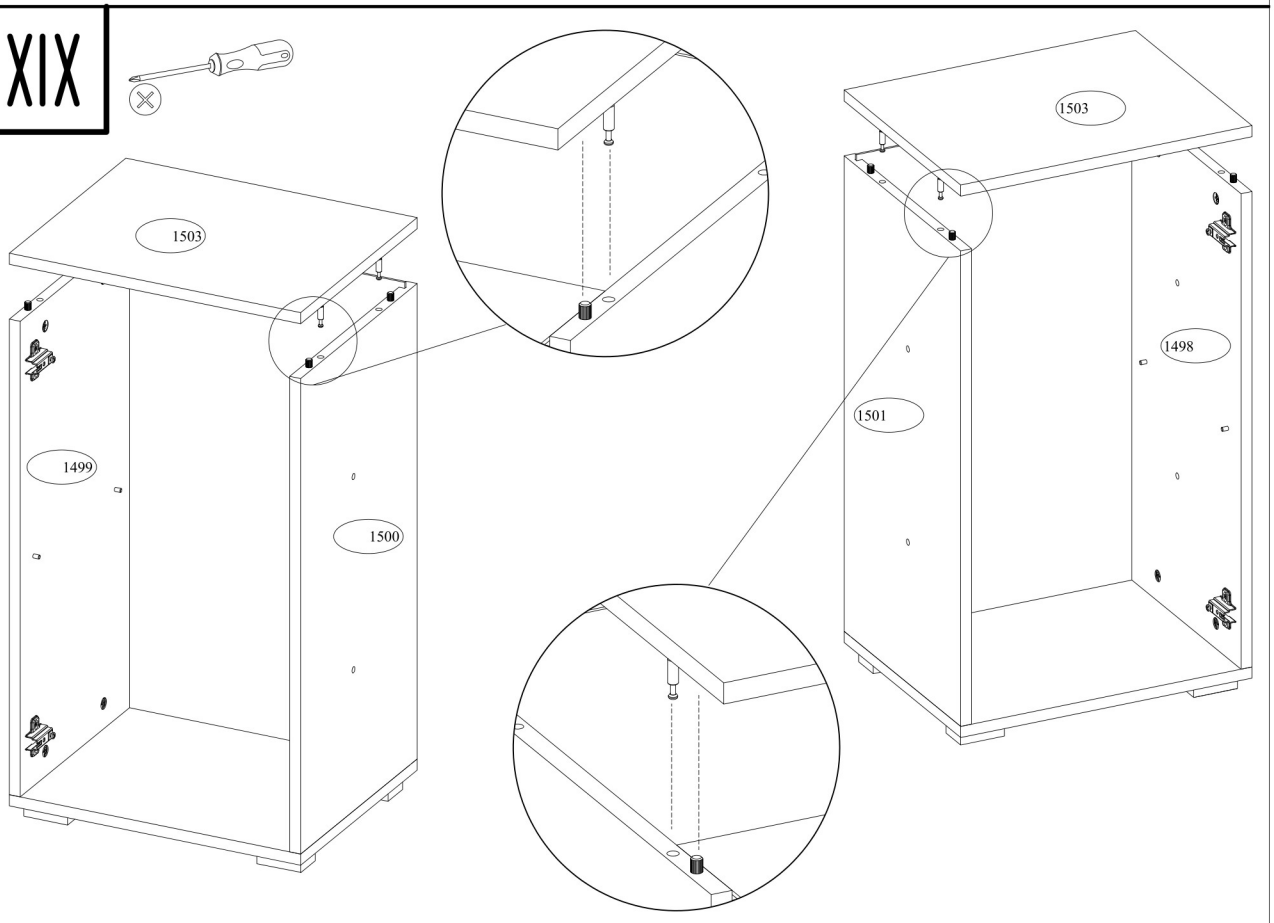

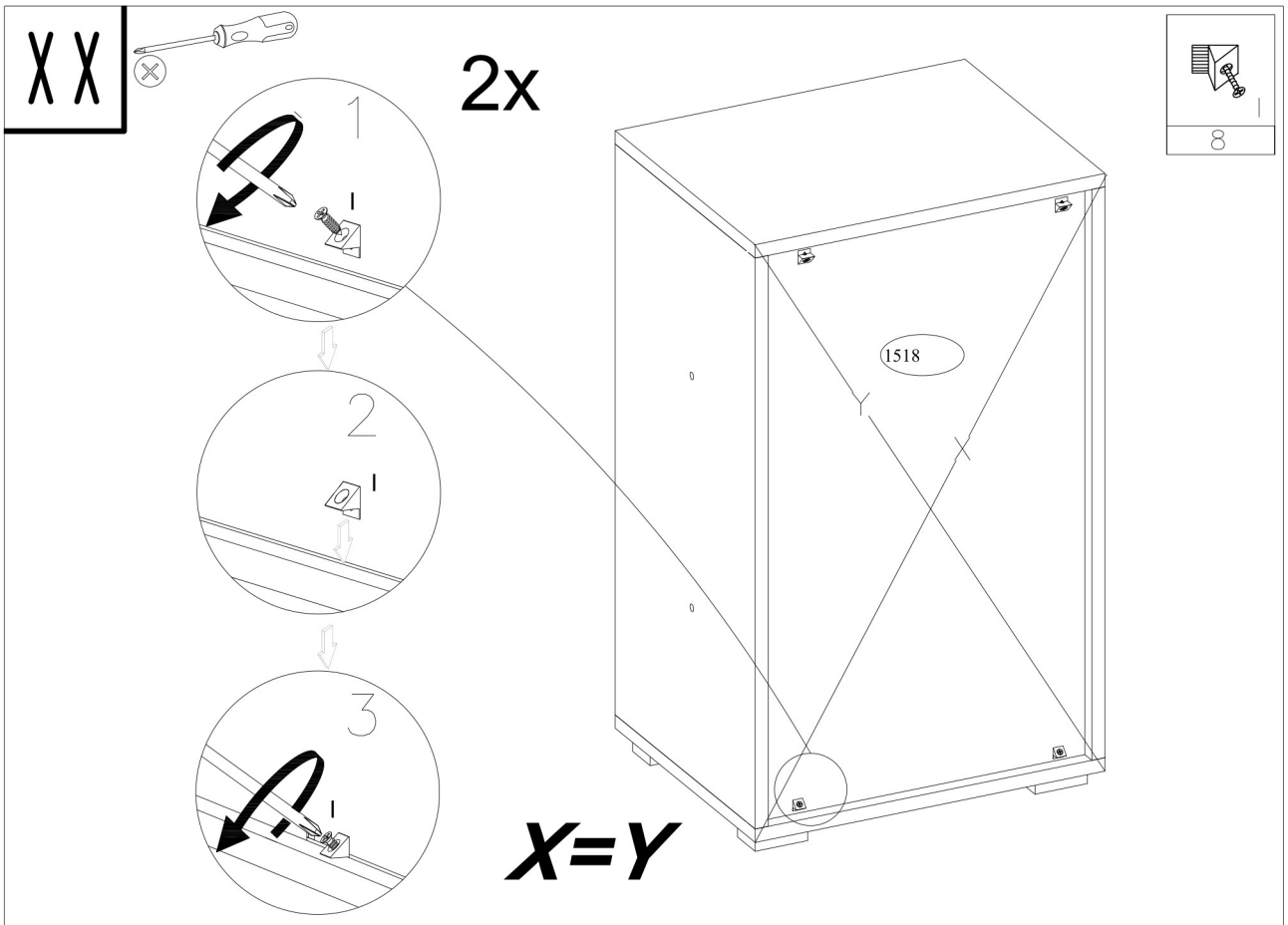
XX
2x
1
2
3
1518
X=Y
8

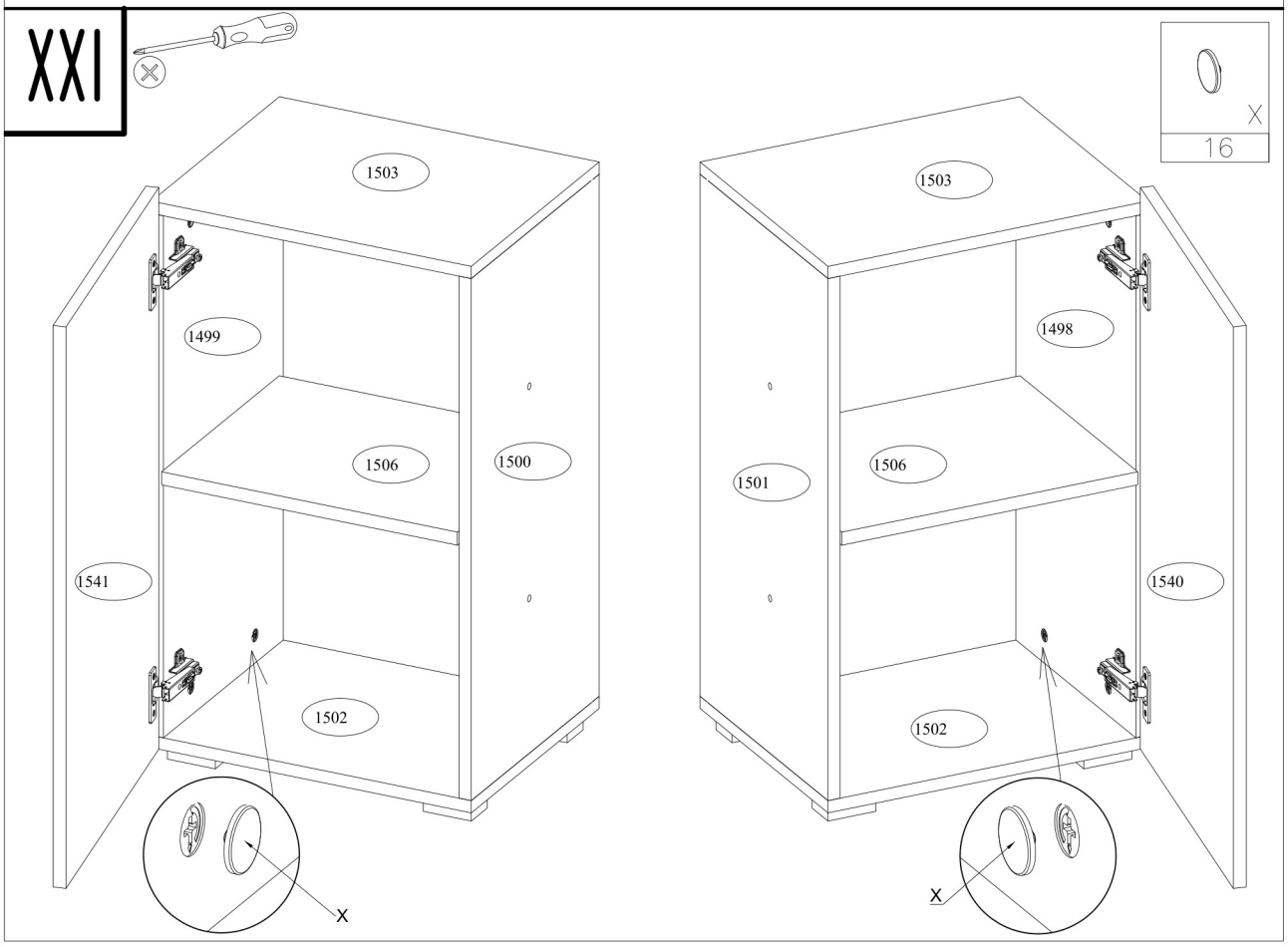
XXI
1503
1499
1506
1500
1541
1502
1503
1498
1501
1506
1540
1502
X
16

DECO IN PARIS

XXII

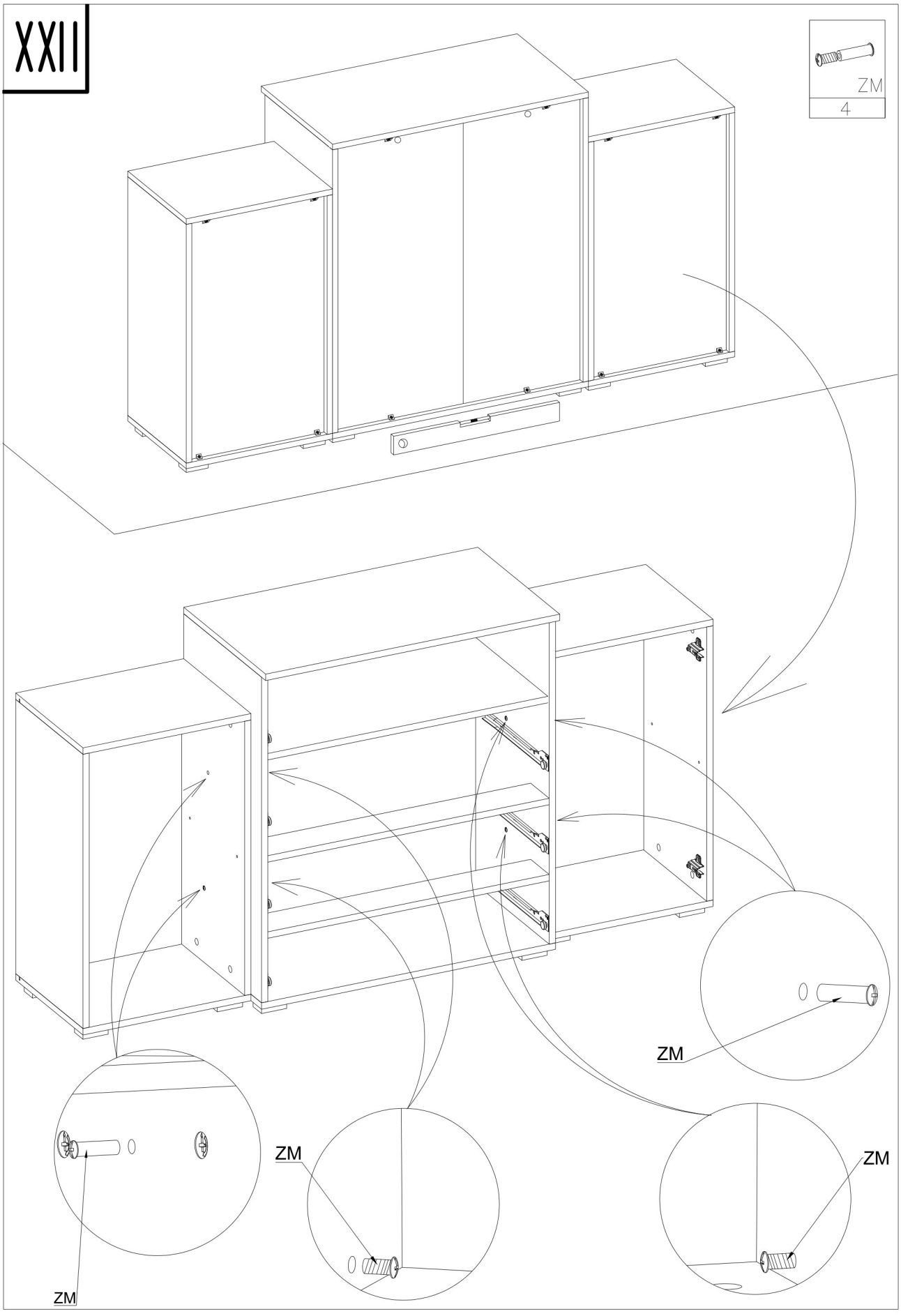

XXIII

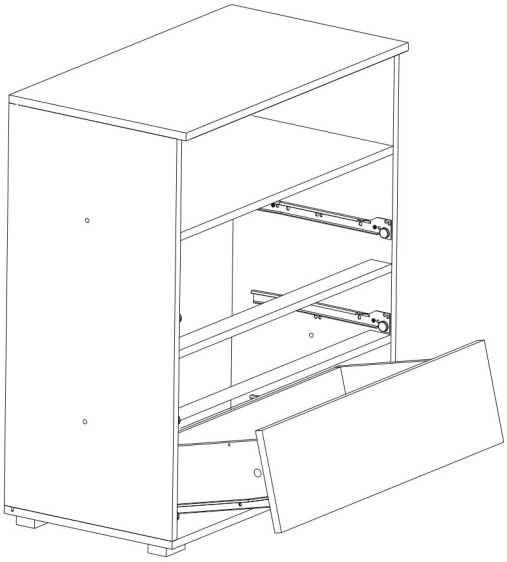

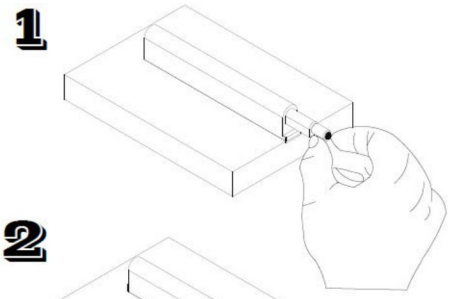
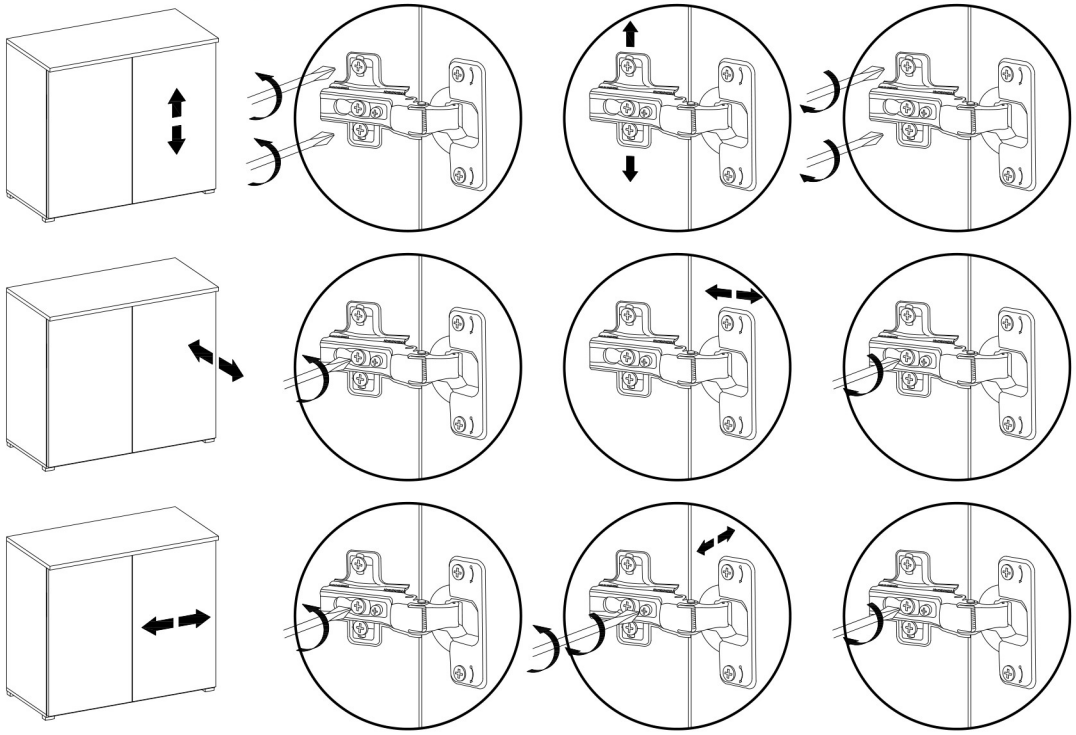
Régler les portes
(ajuster les charnières)